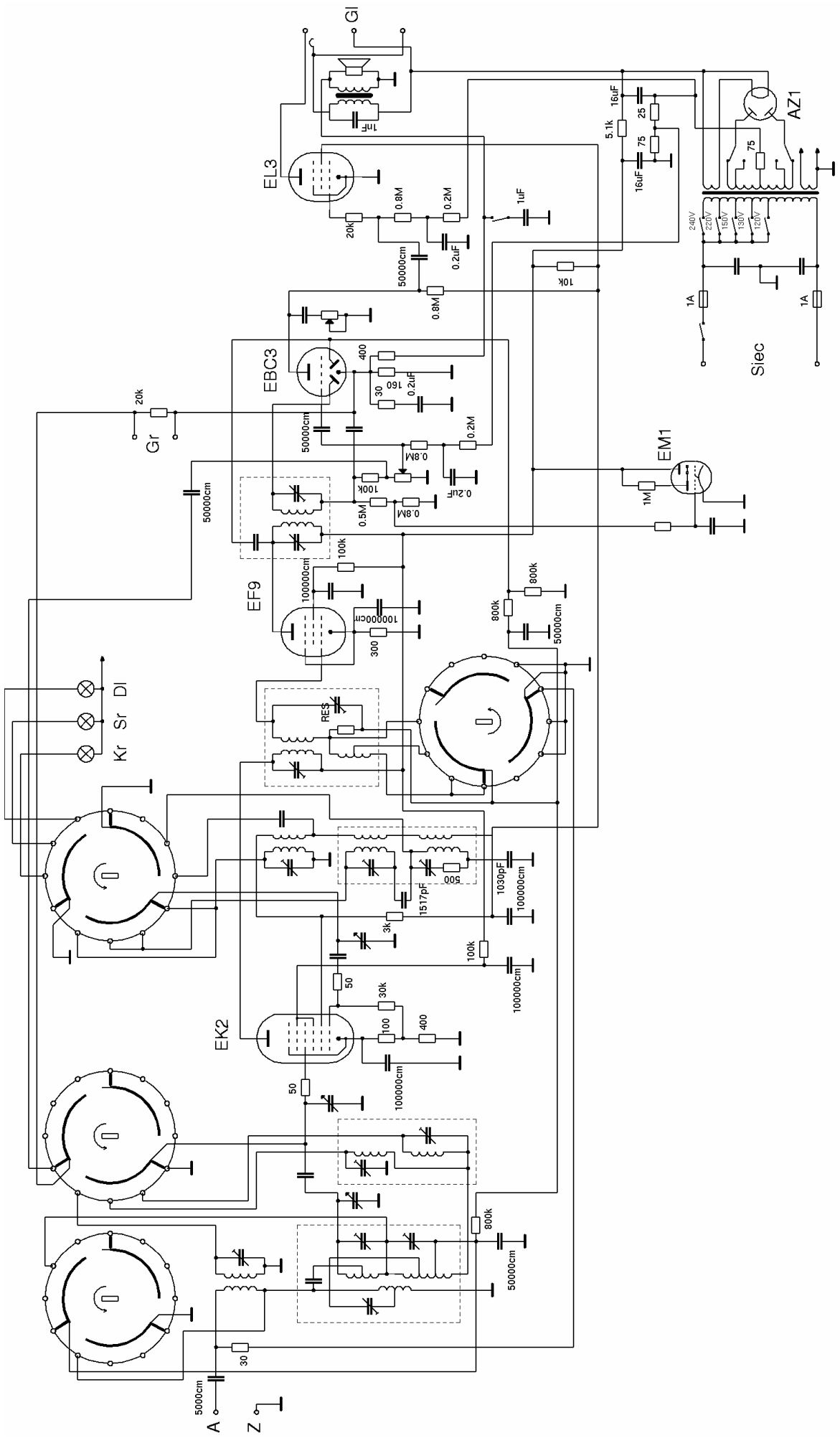Janusz Tuszynski
for www.radiomuseum.org