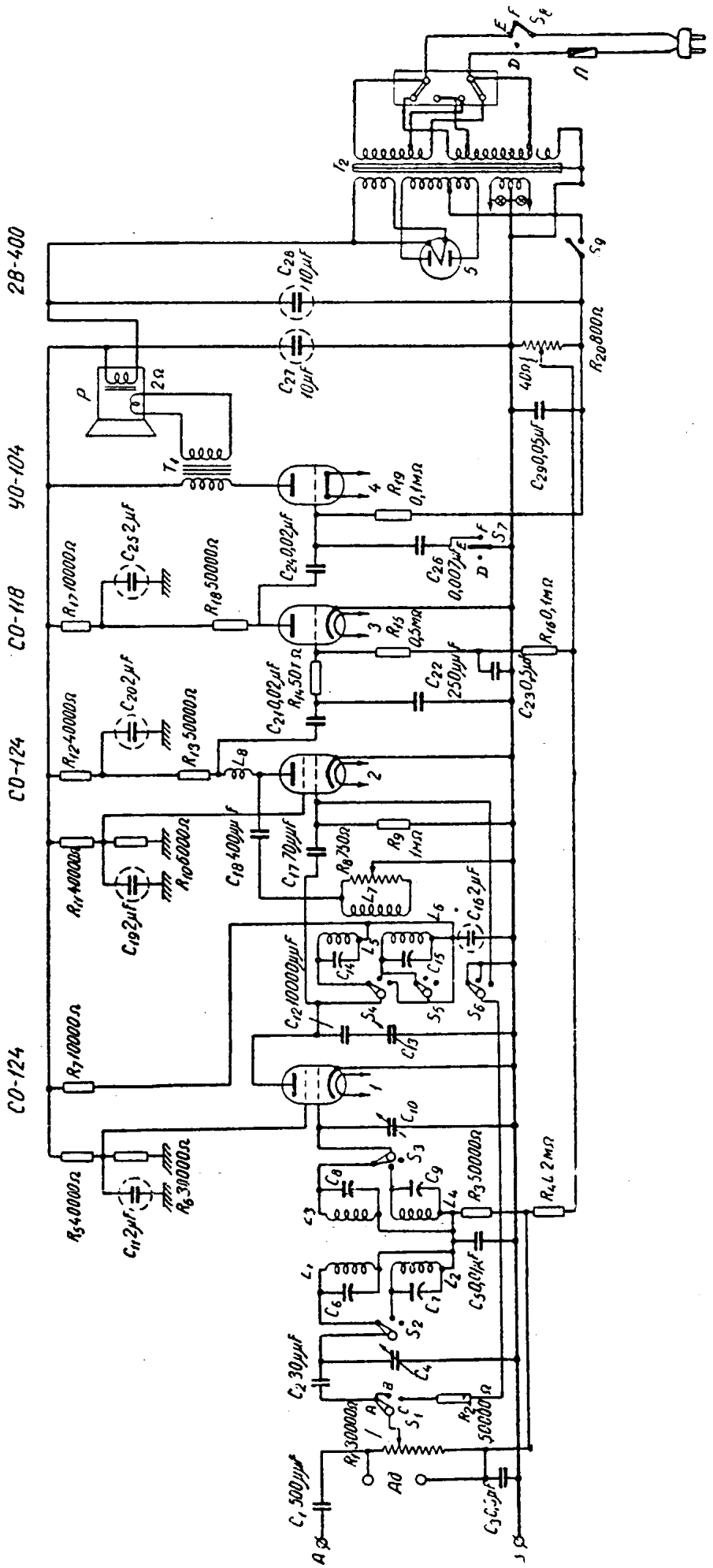Zenonas Langaitis
for www.radiomuseum.org